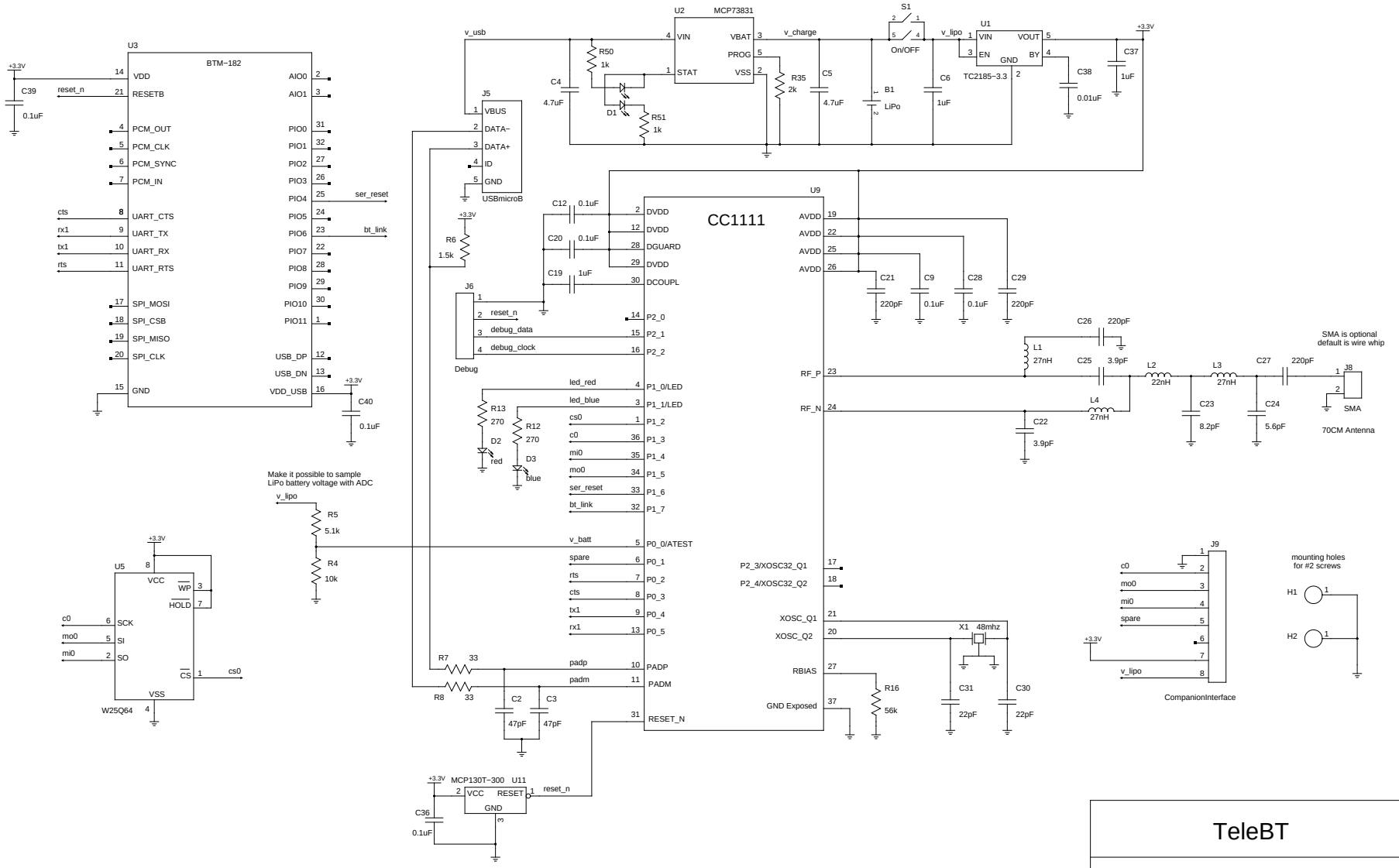

TeleBT

Copyright 2013 by Bdale Garbee <bdale@gag.com>
Licensed under the TAPR Open Hardware License, http://www.tapr.org/OHL

FILE: telebt.sch PAGE 1 OF 1 REVISION: 1.0

Project URL: http://altusmetrum.com/